9T LABS

Red Series®

Product Specification

Build and Fusion modules

The proprietary **Additive Fusion Technology™ (AFT)** allows for full part consolidation by combining state of the art additive manufacturing equipment - Build Module - with advanced post processing technology - Fusion Module - and results in parts that can be used in the most extreme conditions.

Build Module

General	**Process**	**Hybrid CF and neat plastic manufacturing** CF material: Omnidirectional filament placement (OFP) Neat plastic material: Fused Filament Fabrication (FFF)
	Machine Footprint	1167 mm x 715mm x 980mm
	Build volume	350 x 270 x 250 mm
	Operational temperatures	Deposition: up to 450°C Print bed: up to 160°C Build chamber: up to 100°C Material storage: up to 100°C
	Onboard control	Touch display
	Power	230V 50Hz
Material	OFP material	CF/PA and CF/PEKK tapes @ 60% fiber content
	FFF material	PA and PEKK neat filament
Software	Part design	Fibrify™ Design Suite
	Machine operation	Fibrify™ Production
Platform	Connectivity	Ethernet, USB, Wi-FI
	Browser	Accessible via any web browser

9T LABS

Fusion Module

General	**Process**	**Additive Fusion Technology (AFT)**
	Machine Footprint	1730mm x 1100mm x 2515mm
	Fusion volume	350mm x 270mm x 250mm
	Operational fusion temperatures	Active pressure control up to 200 bar (standard fusion pressure app. 10-20 bar)
	Onboard control	Touch display
	Power	400V 50Hz
Forming tools	Concept	Modular frame concept with rigid tooling inserts.
	Part surface	Similar to standard composite moulding processes, no layer step pattern, smooth surface.
	Part dimensions	Outside dimension: ± 0.1 mm Position tolerances: ± 0.05 mm Fit size: ± 0.02 mm
	Tool service	Service function in Fibrify® to one-click order tooling inserts.
Software	Machine operation	Fibrify® Production
Platform	Connectivity	Ethernet, USB
	Browser	Accessible via any web browser

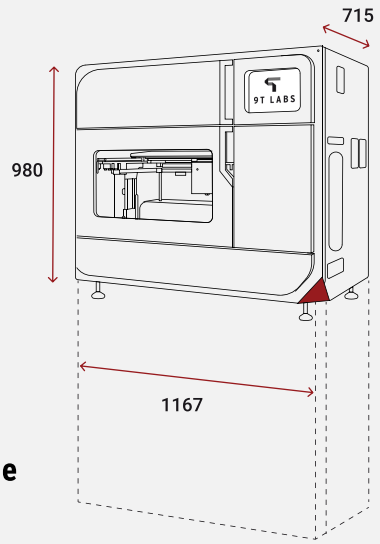

Build Module

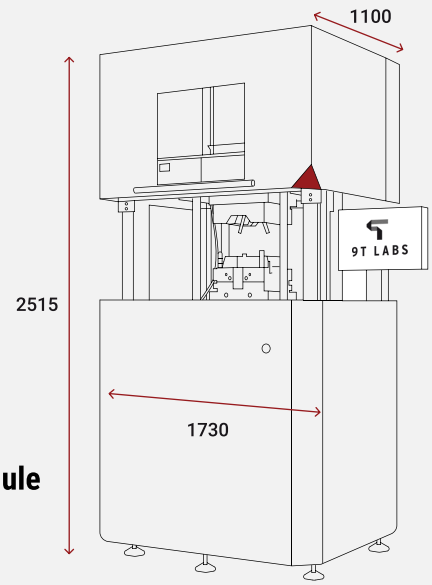

Fusion Module